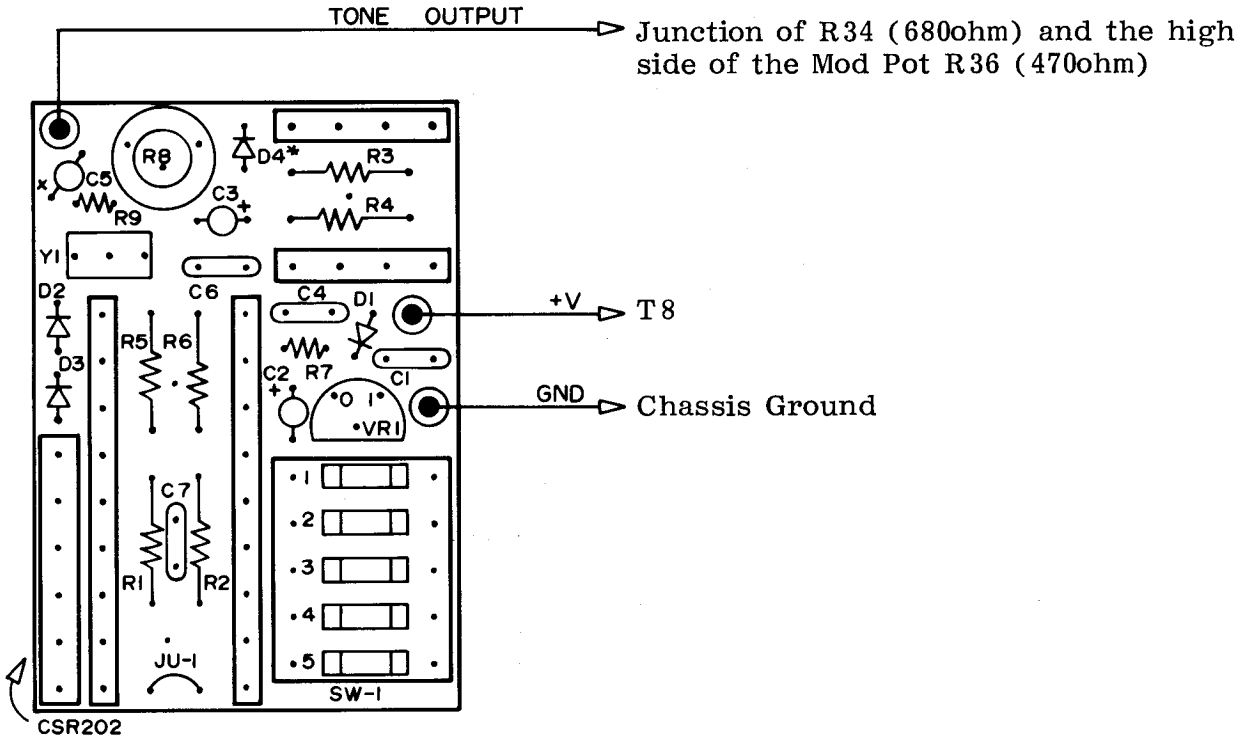

Communications Specialists
426 W. Taft Ave., Orange, CA 92667
(714) 998-3021 (California) / (800) 854-0547