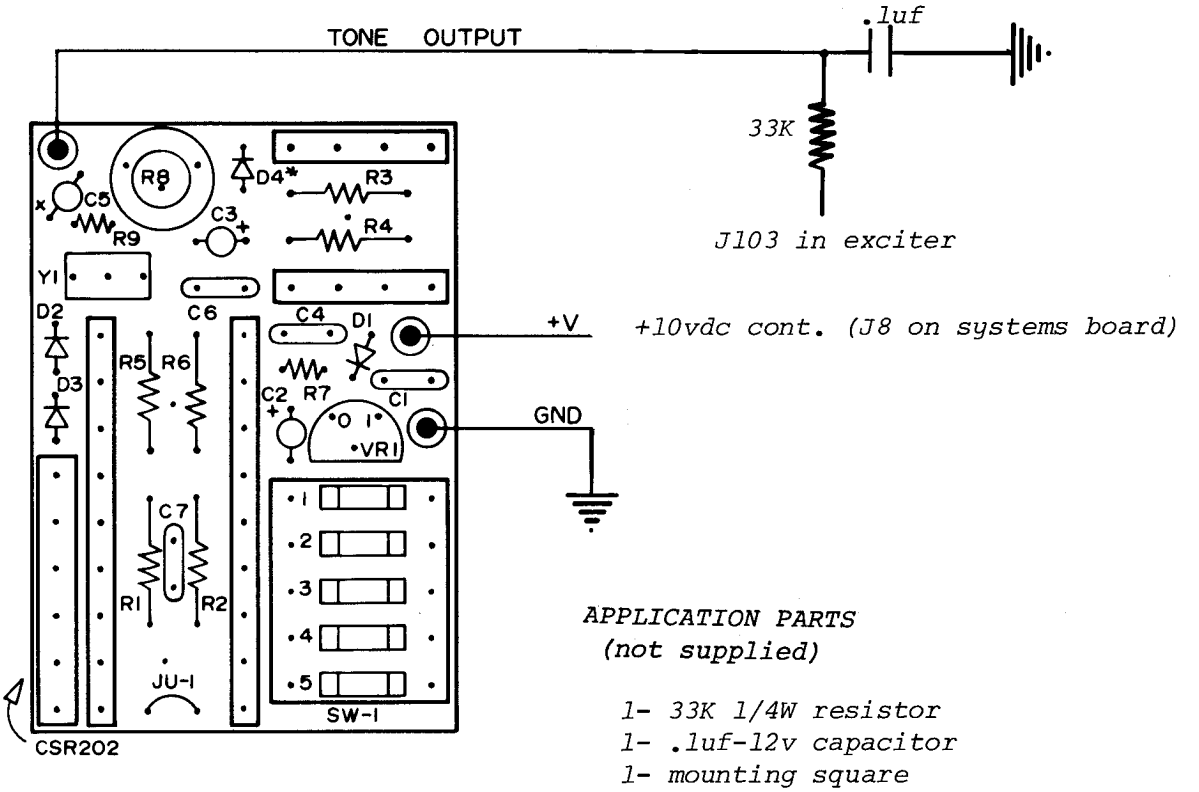

APPLICATION PARTS
(not supplied)

1- 33K 1/4W resistor
1- .1uf-12v capacitor
1- mounting square

Communications Specialists
426 W. Taft Ave., Orange, CA 92667
(714) 998-3021 (California) / (800) 854-0547