UNIVERSAL CSI-100 CONNECTOR WIRING

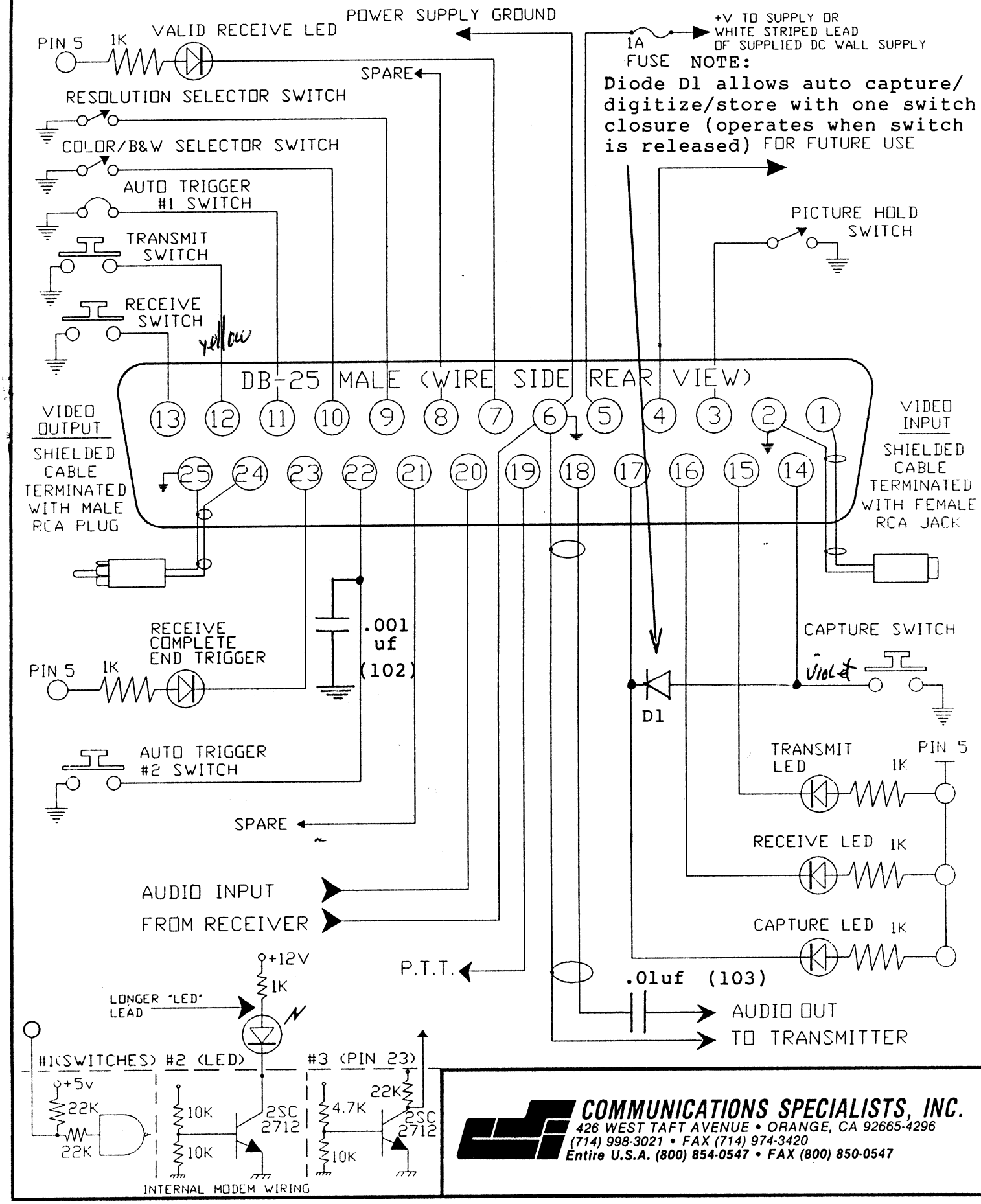

COMMUNICATIONS SPECIALISTS, INC.
426 WEST TAFT AVENUE • ORANGE, CA 92665-4296
(714) 998-3021 • FAX (714) 974-3420
Entire U.S.A. (800) 854-0547 • FAX (800) 850-0547